Mincio™ 24" Single Vanity

Description	Model: MIV24**
Warranty:	One Year Limited Warranty (Parts Only)
Shipping Weight:	115 lbs (52.7 kg)
Shipping Dimensions:	38"H x 24.25"W x 26.5"L (965H mm x 616W mm x 673L mm)

****Available Options:** Sidesplash SV05000 (Dimensions: 20.5" x 0.625" x 3.25)
****Available Colors:** White (WH), Grey (GR), Espresso (ES)

Installation Notes

Refer to installation instructions included with fixture before beginning installation. Please confirm product availability and specifications before commencing with any installation work.

PRODUCT SPECIFICATION AND AVAILABILITY ARE SUBJECT TO CHANGE WITHOUT NOTICE.

Key Dimensions

NOTE: Drawings not to scale.

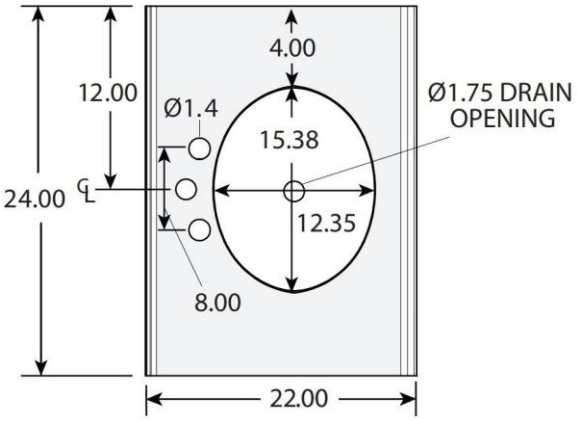

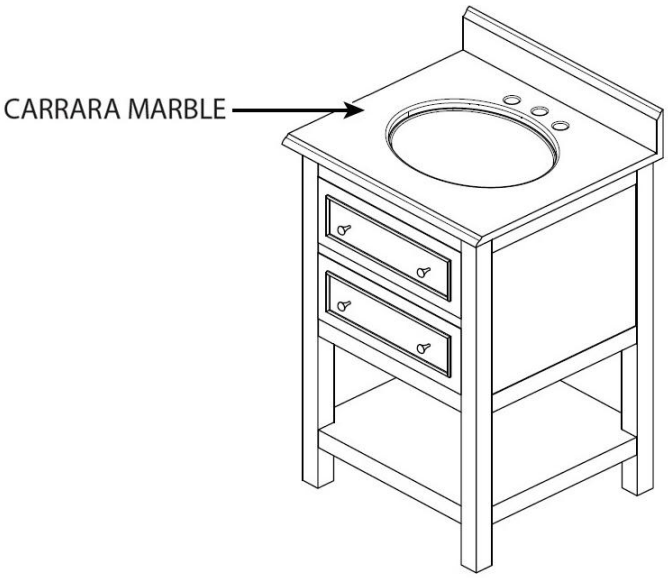

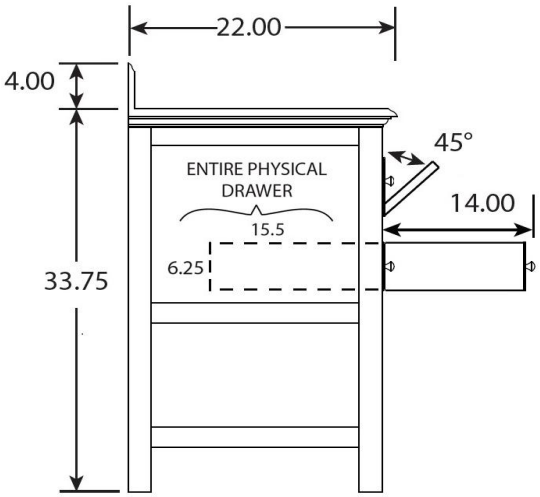

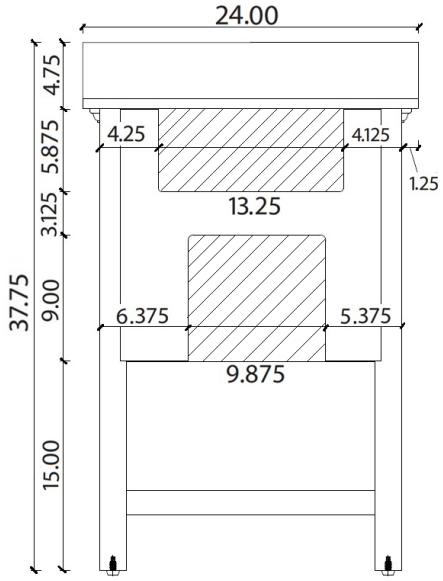

BACK VIEW OF VANITY ROUGHING-IN AREA

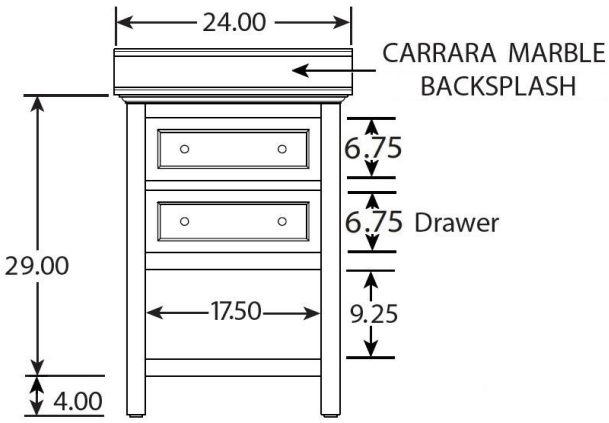

© Jacuzzi Inc. · For additional information call Customer Service (909) 533-4311 · *www.jacuzziluxurybath.com*
Refer to installation instructions included with fixture before beginning installation. Please confirm product availability and specifications before commencing with any installation work.

PRODUCT SPECIFICATIONS AND AVAILABILITY ARE SUBJECT TO CHANGE WITHOUT NOTICE.